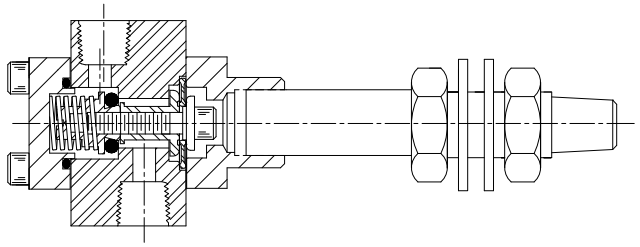

SECTION A-A

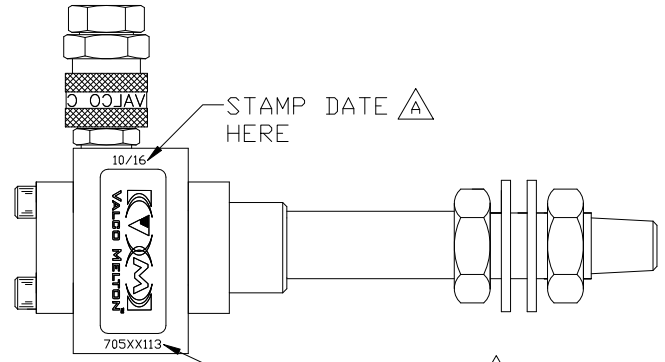


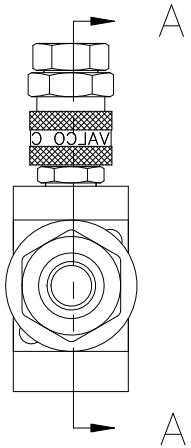


A HANDSTAMP AND ENGRAVING DETAILS:
1. HANDSTAMP "IN" AND "OUT" IF NOT ENGRAVED
2. HANDSTAMP DATE OF ASSEMBLY AND ASSEMBLY PART NUMBER
3. APPLY LABEL (795XX614) TO BOTH SIDES




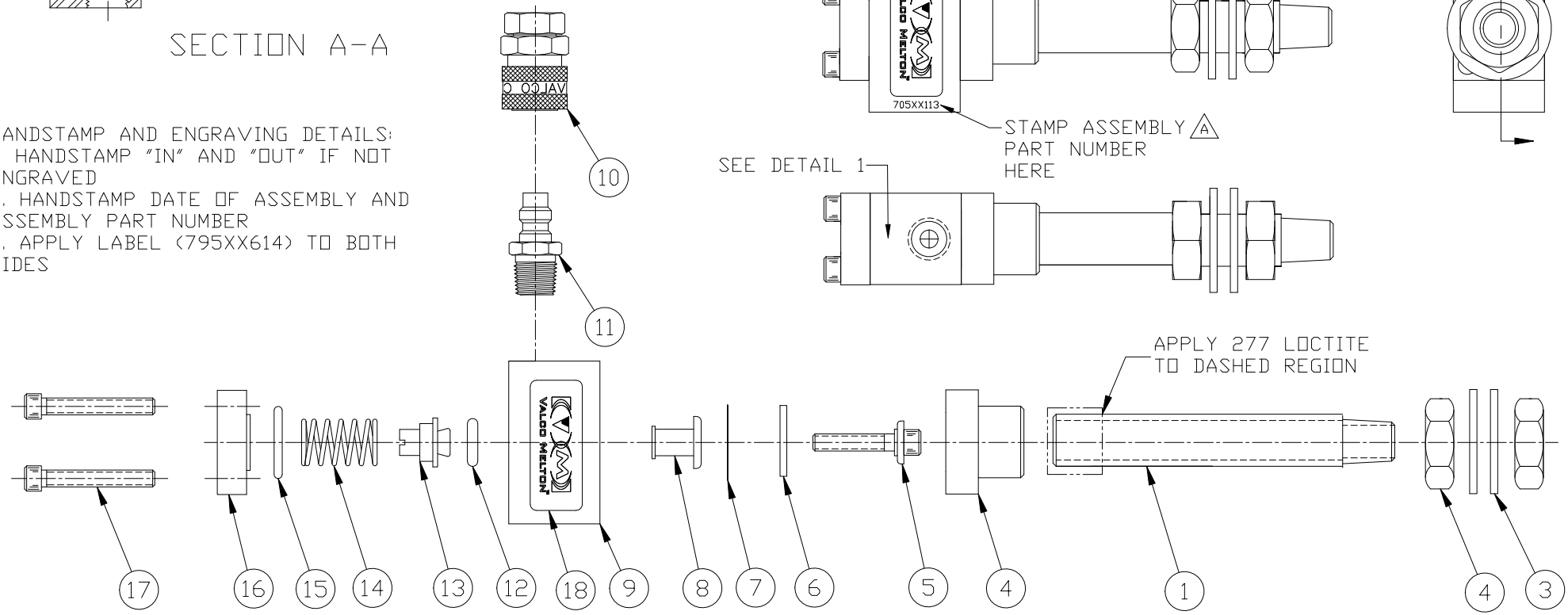


| | | | | | |
|---|---|---|---|---|---|
| USED ON: – | THREAD LENGTH DIMENSIONS ARE FULL THREAD HOLES TO BE CHAMFERED ONE THREAD DEPTH MAX UNLESS OTHERWISE SPECIFIED | VALCO CINCINNATI | | PROPERTY CONTAINING PROPRIETARY INFORMATION WHICH MUST NOT BE REPRODUCED OR DISCLOSED WITHOUT WRITTEN PERMISSION AND MUST BE RETURNED UPON DEMAND. | |
| MTL: – | | TOLERANCES - EXCEPT AS NOTED | | TITLE 366 VALVE, REG INLET 2.75" STUD | |
| FINISH: – | | MACHINED SURFACES 125 | ANGULAR ± 1/2 DEG. | | |
| REV: A HANDSTAMPING AND 05OCT16 TNL ENGRAVING ADDED 17OCT16 BAW | BREAK ALL SHARP EDGES & CORNERS (DEBURR) UNLESS OTHERWISE SPECIFIED (.015 MAX) | INCHES | MILLIMETERS | | |
| | DRAWN BY BRB | DECIMAL .X ± .030 | DECIMAL X, ± ,76 | DATE 13FEB13 | DRAWING NUMBER 705XX113-01 |
| | CHECKED BAW | DECIMAL .XX ± .010 | DECIMAL X,X ± ,25 | SCALE 1=1 | |
| | APPROVED BAW | DECIMAL .XXX ± .005 | DECIMAL X,XX ± ,13 | SHEET 1 OF 1 | SUPERSEDES / SUPERSEDED BY |